MOUNTING INSTRUCTION
MONTAGEANLEITUNG
PRÉSCRIPTION DE MONTAGE
MONTAGE-INSTRUCTIE

COMPACT RF ELECTROL
COMPACT ELECTROL
CINEMA RF ELECTROL
CINEMA ELECTROL

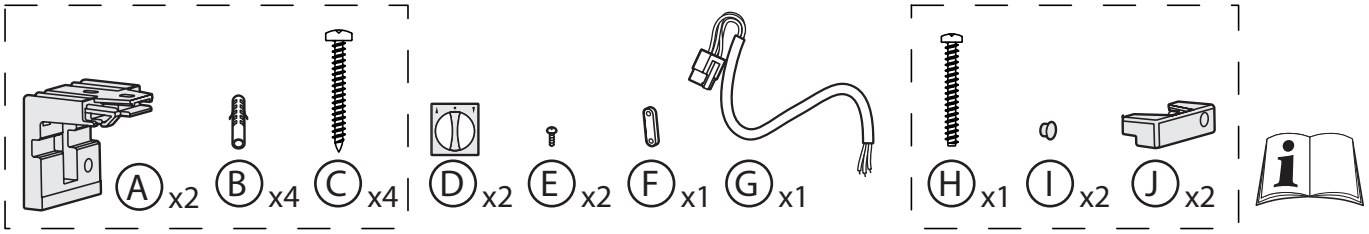

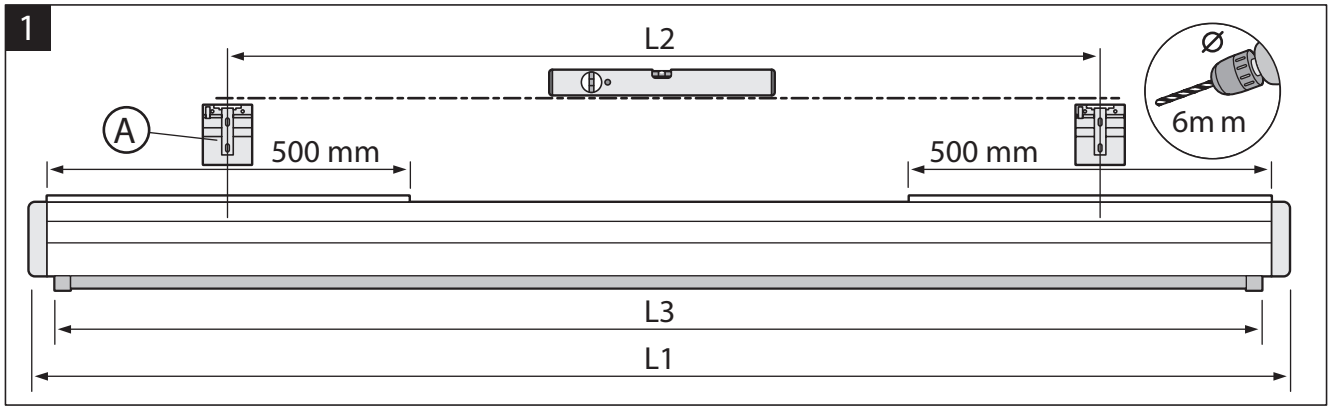

	L1	L2 +/- 420 mm	L3
1600 mm	1714 mm	1134 mm	1620 mm
1800 mm	1914 mm	1334 mm	1820 mm
2000 mm	2134 mm	1554 mm	2040 mm
2200 mm	2334 mm	1754 mm	2240 mm
2400 mm	2534 mm	1954 mm	2440 mm
2800 mm	2934 mm	2354 mm	2840 mm
3000 mm	3134 mm	2554 mm	3040 mm

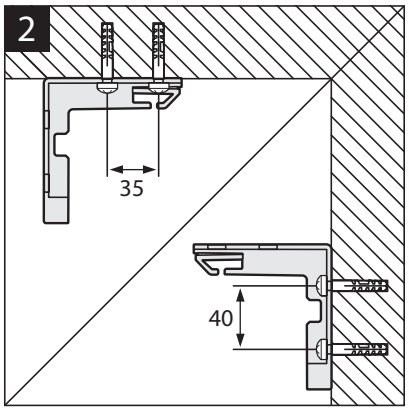

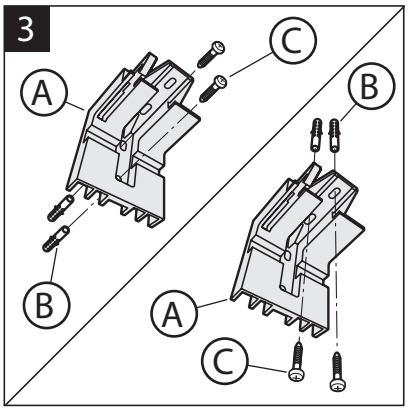

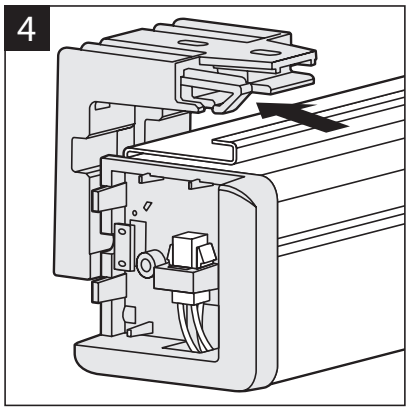

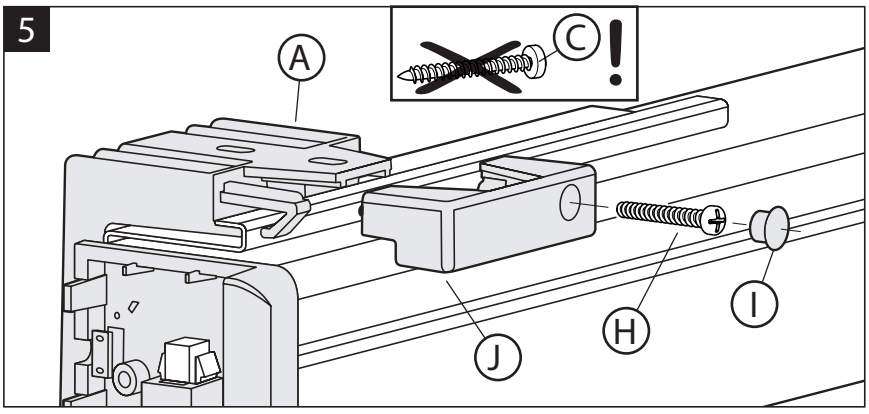

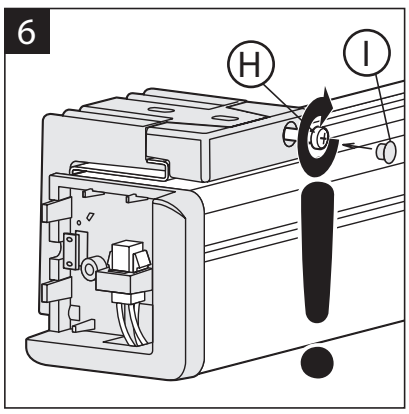

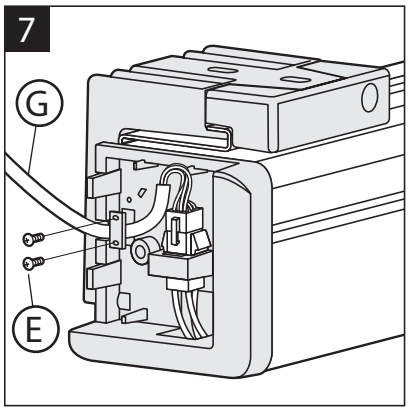

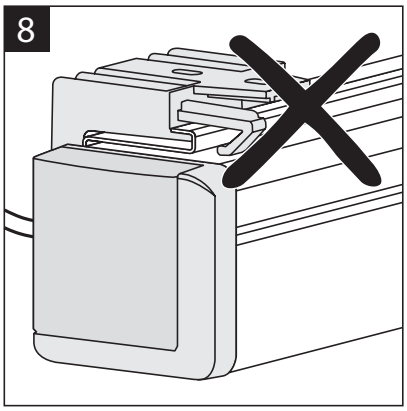

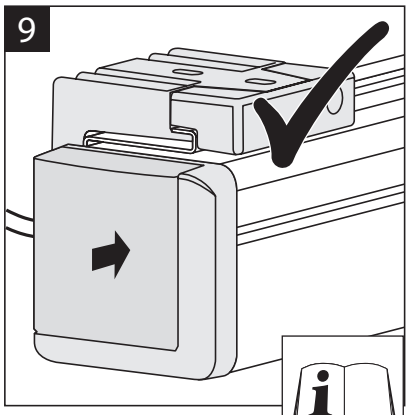

30750373

Specifications are subject to change without prior notice.Version 01/2008